EA DOGS104-B

4x20 INCL. CONTROLLER IST3602 FOR SPI, I²C AND 8-BIT

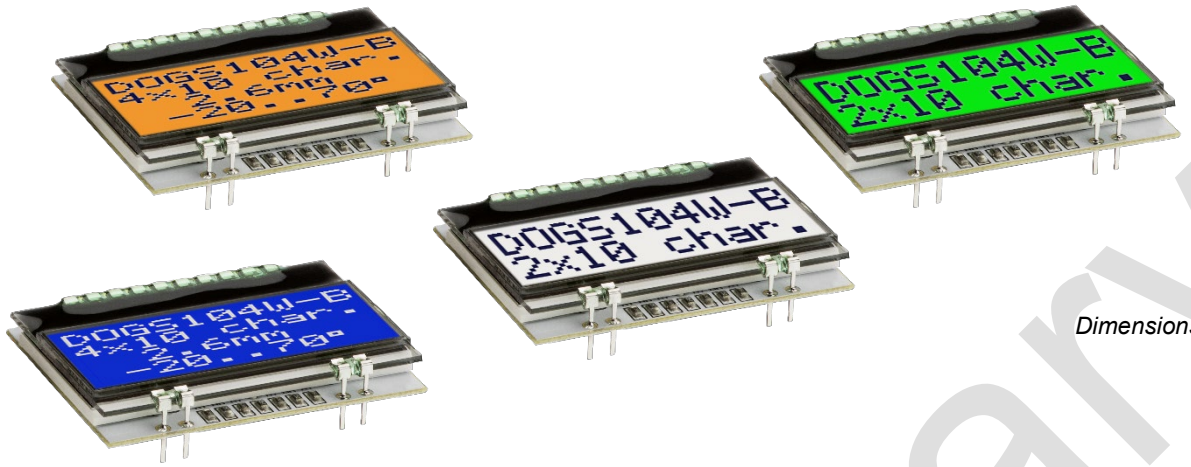

Dimensions 36x27.5x4.6 mm

TECHNICAL DATA

- HIGH-CONTRAST LCD SUPERTWIST DISPLAY
- OPTIONAL LED BACKLIGHT IN DIFFERENT COLORS
- 4X20 CHARACTERS WITH 2.6 MM FONT
- CONTROLLER IST3602 FOR SPI (3-/4-WIRE) AND I²C (2-WIRE) INTERFACE
- POWER SUPPLY +3.3V SINGLE SUPPLY (TYP. 460µA)
- NO ADDITIONAL VOLTAGES REQUIRED
- OPERATING TEMPERATURE RANGE -20…+70°C (STORAGE TEMPERATURE -30...+80°C)
- LED BACKLIGHT 3…45 mA@3.3V
- NO ASSEMBLY REQUIRED: JUST SOLDER INTO PCB
- 2 INSTALLATION DIRECTIONS POSSIBLE (TOP AND BOTTOM VIEW)

ORDER DESCRIPTION

LCD-MODUL 4x20 – 2.6 mm

Blue background transmissive	**EA DOGS104B-B**
White background transflective	**EA DOGS104W-B**
Black background transmissive	**EA DOGS104S-B**
White background not illuminated; reflective	**EA DOGS104N-B**

LED LIGHTING

Amber monochrome	**EA LED36x28-A**
Green/Red Bi-color	**EA LED36x28-GR**
Green/Red/white Tri-color	**EA LED36x28-ERW**

ACCESSORIES

TEST BOARD WITH USB (PLS. ALSO ORDER 9980-204)	**EA 9780-4USB**
ADAPTOR BOARD FOR 9780-4USB	**EA 9980-204**
SOCKET HEADER 4.8mm HIGH (2 PIECES REQUIRED)	**EA FL-22P**

preliminary

DISPLAY VISIONS GmbH
Zeppelinstraße 19
D-82205 Gilching
Germany

Phone: +49 (0)8105-7780 90
Fax: +49 (0)8105-7780 99
e-Mail: info@lcd-module.de
Web: www.lcd-module.de

Issue 08.2026

DOCUMENTATION HISTORY

Revision	Date	Description
1.0	2026/08/18	First issue

EA DOG SERIES

With the EA DOG series, DISPLAY VISIONS presents the world's 1st display series, which can be run on 3.3 V systems without additional auxiliary voltage.
Unlike conventional LCD modules, you order the display and the corresponding backlight separately. This results in a wide range of possible combinations.
Designed for compact handheld devices, this modern LCD series with and without backlight offers a range of real advantages:

- extremely compact with 36x28 mm with a standard character size of 2.6 mm (4x20)!
- super slim with 2.0 mm unlit or 4.6 mm incl. backlight
- 8-bit, SPI (3-/4-wire) and I²C (2-wire) interface
- Just typically 460µA power consumption in full operation (LED lighting white from 3mA)
- Simple installation by soldering
- Various design variants available from 1 piece

LED BACKLIGHT

For individual backlighting, 3 different variants are available: white, amber and green/red
For the monochrome lighting, 3 separate LED paths are available, which can be connected in parallel or in series for optimal adaptation to the system voltage. This means that all lighting can alternatively be operated with 3.3 V or a higher voltage!
Backlight operation requires an external resistor to limit current. This is calculated by R=U/I; the values can be found in the following tables. For an optimal lifespan, we recommend using a current source.
Depending on the current and temperature, the service life of backlight is >50,000 hours. Note that ambient temperature and LED current have a major effect on aging.
Attention: Never operate the lighting directly at 5V/3.3V; this can lead to the immediate destruction of the LEDs! Be sure to note a derating at temperatures >25°C.

Assembly

First, the display and the respective lighting fixture are plugged into each other. Then the entire unit is simply plugged into a circuit board and soldered there. Please note that the 4 pins for the lighting must also be soldered from above.
Attention: There are 1-2 protective films on the display (top and/or bottom) and one protective film on each of the backlight. These must be removed during or after production.

Type	Connection	Forward voltage	Max. Current	Limiting resistor	
				@ 3.3 V	@ 5.0 V
EA LED36x28-A 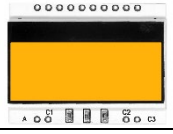	Parallel	2.1 V	60 mA	20 Ω	48 Ω
	Series	4.2 V	30 mA	-	27 Ω
EA LED36x28-GR 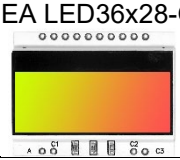	Red path	2.1 V	45 mA	27 Ω	65 Ω
	Yellow green path	2.1 V	60 mA	20 Ω	48 Ω
EA LED36x28-GRW 	Green path	3.0 V	45 mA	7 Ω	45 Ω
	Red path	2.1 V	45 mA	27 Ω	65 Ω
	White path	3.0 V	30 mA	10 Ω	67 Ω

Preliminary

DIFFERENT TECHNOLOGIES

As standard, 4 different technologies are available in STN and FSTN:

Display Type	Technology	Optional backlight	Readability	Display color unlit	Display color with backlight	Recommended Backlight
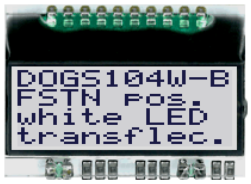	FSTN positive transflective	Readable with and without illumination	Readable even when the lights are off	Black on white	Black on lighting paint	All
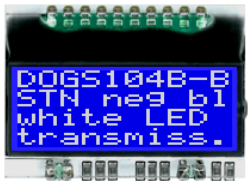	STN negative blue transmissive	To be used only illuminated	---	---	Lighting color on blue background	white
	FSTN positive reflective	No light possible	Easily readable without lighting	Black on white	---	---

3 DIFFERENT BACKLIGHTS

To adapt to a wide variety of designs, there are 3 different lighting colors to choose from. The most effective and at the same time brightest backlight is the white EA LED36x28-ERW.

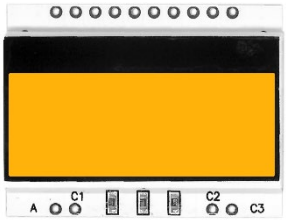

amber
EA LED36x28--a

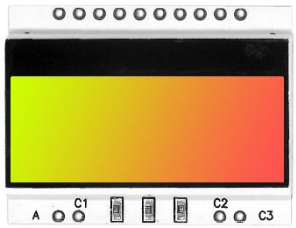

Bi-color grün rot
EA LED36x28-GR

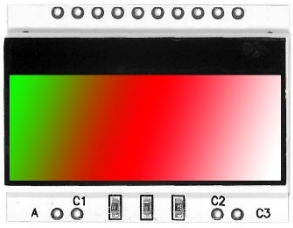

Tri-color grün rot weiß
EA LED36x28-ERW

USB TEST BOARD EA 9780-4USB

For easy starting, a USB test board is available for connection to a PC. A USB cable and Windows software are included. This can also be used to display your own texts directly on the connected display.

SIMULATION ON WINDOWS

Without buying a display in advance, all versions and colors can be displayed on the PC with a simulator. The software is available for download free of charge on our website:
https://www.lcd-module.de/fileadmin/downloads/startdog_v48.zip

preliminary

APPLICATION EXAMPLES

Depending on the interface, a specific wiring must be chosen. Please note that due to COG technology, the current carrying capacity of the outputs is limited. This can lead to signal distortion and unclean levels with a larger bus load. In case of doubt, additional pull-down resistors (8051) are required, or additional waits/NOP's must be inserted.
Please pay special attention to the selection of pull-up resistors for the I²C bus connection. The SDA+SCK pins have an internal resistance of approx. 600...1000Ω, possibly even more (affects LO level when reading data or the ACK bit).

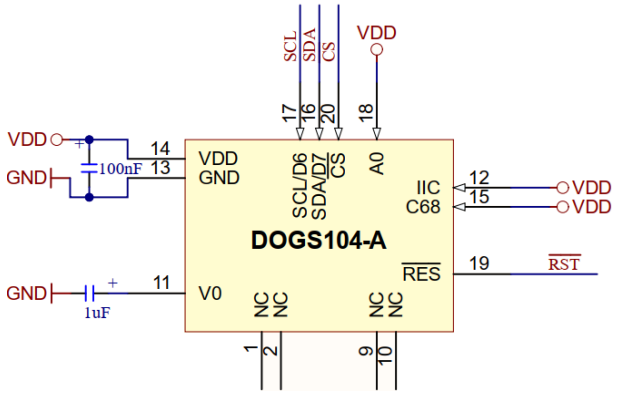

SPI 9-Bit interface

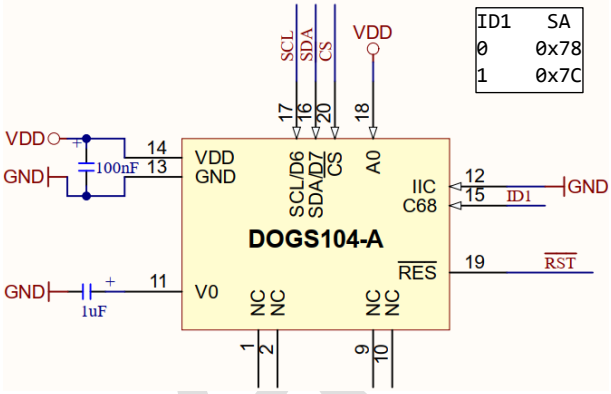

I²C interface (ID1 sets I²C address)

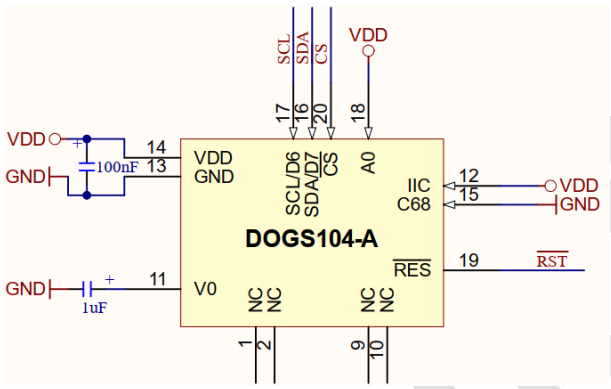

SPI 8-Bit interface

To ensure error-free function and initialization of the display, we recommend actively operating the reset. This can be done either via a port of the microcontroller or by means of a reset circuit. Here is an application example:

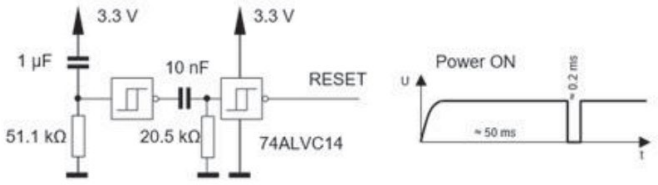

Preliminary

SERIAL INTERFACE (SPI)

The serial interface (SPI) can be used as either a 4 line (8 bit) or a 3 line (9 bit). See application examples above. We recommend using the CS line. If the chip is not selected, the shift register and serial data counter will be reset, SDA and SCL will also be disabled internally. The interface is in SPI mode 3 (CPOL = 1, CPHA = 1), MSB first. The maximum clock frequency is 5 MHz.

4-Line serial interface:

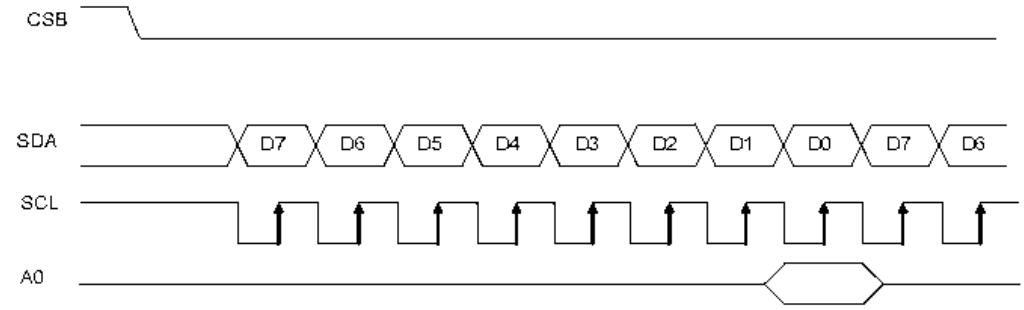

3-Line serial interface:

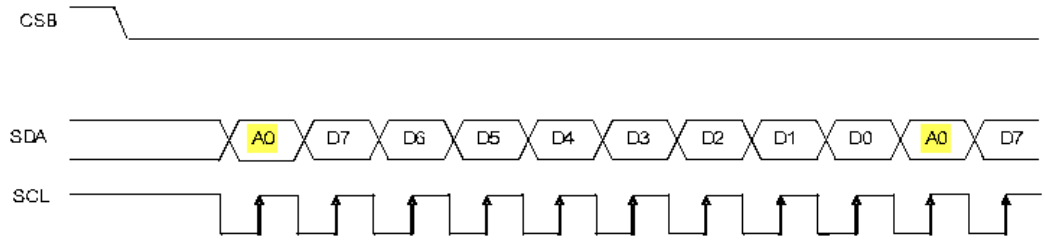

I²C INTERFACE

Two I²C slave addresses can be assigned to the display. After transmitting the start condition, the slave address set by hardware must be transmitted in the first byte, as well as the Read(1)/Write(0) bit. In the case of write access, the address is always followed by a control byte with the information Data(1) or Command(0). The continuation bit (C0) must always be set to 1 during transmission. The maximum bus frequency is 400 kHz. When selecting the pull-up resistors, please note that the SDA+SCK connector pins have an internal resistance of approx. 600…1000 Ω, possibly even more (LO level when reading data or the ACK bit).

ID1 (C68)	8-bit address (incl. RW bit)	7-bit address
0	0x78	0x3C
1	0x7C	0x3E

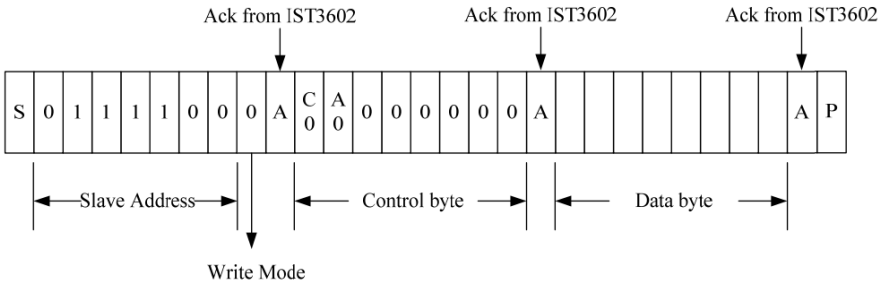

INITIALIZATION EXAMPLE

The following example initializes the EA DOGS104x-B. Details on the individual commands can be found in the data sheet of the IST3602: http://www.lcd-module.de/fileadmin/eng/pdf/zubehoer/IST3602-RD-0213 Version 009.pdf

```
init_DOGS104()
{
    toggle_reset();
    delay_ms(1);

    command(0x21); Function set ID[1,0] = 0,1
    command(0x30); Sleep off
    delay_ms(1);
    command(0x71); Booster 6x
    command(0x12); Bias select 1/6
    command(0x67); ICON Power off, Build-in booster on, regulator on, follower on.

    command(0x23); Function set IS[1,0]=1,1
    command(0x11); Disable power loss detection (double byte command)
    command(0x20); disable
    command(0xA5); Gain values regulator set 7.0 V(ref)
    command(0x81); Contrast setting (double byte command)
    command(0x8F); disable

    command(0x22); Function set IS[1,0]=1,0
    command(0x13); Normal font, 4 line display 1/33 Duty
    command(0x4F); Bottom view, default

    command(0x20); Function set IS[1,0]=0,0
    command(0x0F); Display on, cursor on, blink on
    command(0x06); Entry mode Incrment cursor
    command(0x01); Clear Display, not setting CGRAM Address
    command(0x90); Set Cursor position (double byte command)
    command(0x00); First line
}
```

INSTALLATION POSITION: VIEWING ANGLE

If the display is mainly read from above (e.g. in the front of a laboratory power supply), the preferred viewing angle can be set to 12:00 o'clock. To do this, the display is rotated by 180° and initialized slightly differently (DDRAM offset +14):

```
change_TopView()
{
      command(0x22); Function set IS[1,0]=1,0
      command(0x4C); Top view (Bottom view = 0x4F)
      command(0x20); Function set IS[1,0]=0,0
}
```

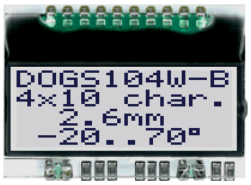

Bottom view

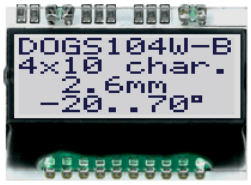

Top View

CONTRAST SETTING

The display contrast can be adjusted by command. The command "Power/Icon Control" must have activated the booster. The command "Rgain set" sets the voltage generator. The fine adjustment is done via the CT0...CT7 bits in the 'Contrast Set command'. The contrast is set once and then, thanks to integrated temperature compensation, is kept constant over the entire operating temperature range (-20..+70°C).

```
set_Contrast(uint8_t contrast)
{
      command(0x23); Function set IS[1,0]=1,1
      command(0x81); Contrast setting (double byte command)
      command(contrast);
      command(0x20); Function set IS[1,0]=0,0
}
```

CHARACTER SET



SELF-DEFINED CHARACTERS

It is possible to freely define up to 8 more characters in addition to the characters permanently stored in the ROM (ASCII codes 0..7). If you want to use self-defined characters, the first 6, 8 or 16 characters from the existing ROM code will be temporarily overwritten. The newly defined character is treated in the same way as a "normal" ASCII character (usage: "DD RAM Address Set", "Data Write"). A character requires 8 write operations, where the 8th line corresponds to the cursor line. The following is an example:

Bit								
7	6	5	4	3	2	1	0	HEX
x	x	x	0	0	1	0	0	0x04
			0	0	1	0	0	0x04
			0	0	1	0	0	0x04
			0	0	1	0	0	0x04
			1	0	1	0	1	0x15
			0	1	1	1	0	0x0E
			0	0	1	0	0	0x04
			0	0	0	0	0	0x00

```
add_char(uint8_t address, uint8_t *dat)
{
      command(0x22); Function set IS[1,0]=1,0
      command(0x47); Bottom view, 8 free characters (Top View = 0x44)
      command(0x20); Function set IS[1,0]=0,0
      command(0x91); Set CGRAM address (double byte command)
      command(address);

      for(uint8_t i=0; i<8; i++)
            data(*dat++); Write data to CGRAM
}
```

DDRAM ADDRESS

The DDRAM address is set via the command 'Set DDRAM Address'. The double-byte command starts with 0x90, the second byte sets the actual DDRAM address:

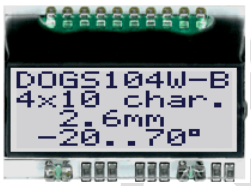

	1	2	3	…	9	10
1st line	0x00	0x01	0x02	…	0x09	0x0A
2nd line	0x18	0x19	0x1A	…	0x21	0x22
3rd line	0x30	0x31	0x32	…	0x39	0x3A
4th line	0x48	0x49	0x4A		0x51	0x52

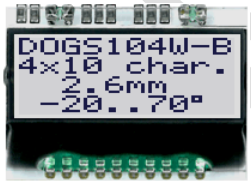

	1	2	3	…	9	10
1st line	0x0E	0x0F	0x10	…	0x16	0x17
2nd line	0x26	0x27	0x28	…	0x2E	0x2F
3rd line	0x3E	0x3F	0x40	…	0x46	0x47
4th line	0x56	0x57	0x58		0x5E	0x5F

preliminary

“DOUBLE HEIGHT”

The module allows you to merge lines, meaning you can use double or even quadruple line heights. This enlarges the characters, which improves readability from a distance, for example.

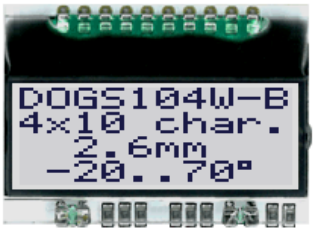



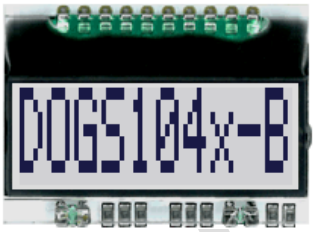


```
set_charHeight(uint8_t zoom)
{
      command(0x22); //Function set IS[1,0]=1,0
      if(zoom == 4)
            command(0x1F); //char 5x32 dots quadruple height, 4 line display 1/33 Duty
      else if(zoom == 2)
            command(0x17); //char 5x16 dots double height, 4 line display 1/33 Duty
      else
            command(0x13); //char 5x8 dots Normal font, 4 line display 1/33 Duty
      command(0x20); //Function set IS[1,0]=0,0
}
```

COMPATIBILITY EA DOGS104X-A

MECHANICS

Both modules are mechanically identical. All fastenings, milling and cutouts are still 100% compatible.

ELECTRIC

The backlight is identical and is offered unchanged. Therefore, forward voltage, current consumption, brightness and control circuit can be used unchanged.
The electrical wiring of the EA DOGS104x-B has to be adapted due to the discontinued display controller SSD1803A. The new EA DOGS104x-B version only requires one capacitor for the charge pump. Adjustments to the circuit diagram and layout can be found in the application examples and the modified pinout. Especially when using the serial interface (SPI), the CS should be wired.
Current consumption stays in the same range of 450 to 460 µA.

SOFTWARE

The serial interface (SPI), has a simplified data transmission. The amount of data is reduced. No synchronization bytes are necessary.
The modified controller needs a different initialization. These can be found in the initialization example from this data sheet.
Important differences of the instruction set:

- Fixed character set. No ROM switching possible.
- DDRAM address is executed with a double-byte command: (0x90, 0x00... 0x52)
- Double row height can only be applied to all four rows, not to individual pairs of rows.

A detailed comparision can be found under:
https://www.lcd-module.de/fileadmin/eng/pdf/doma/comparison DOGS104-A to DOGS104-B.pdf

preliminary

DIMENSIONS

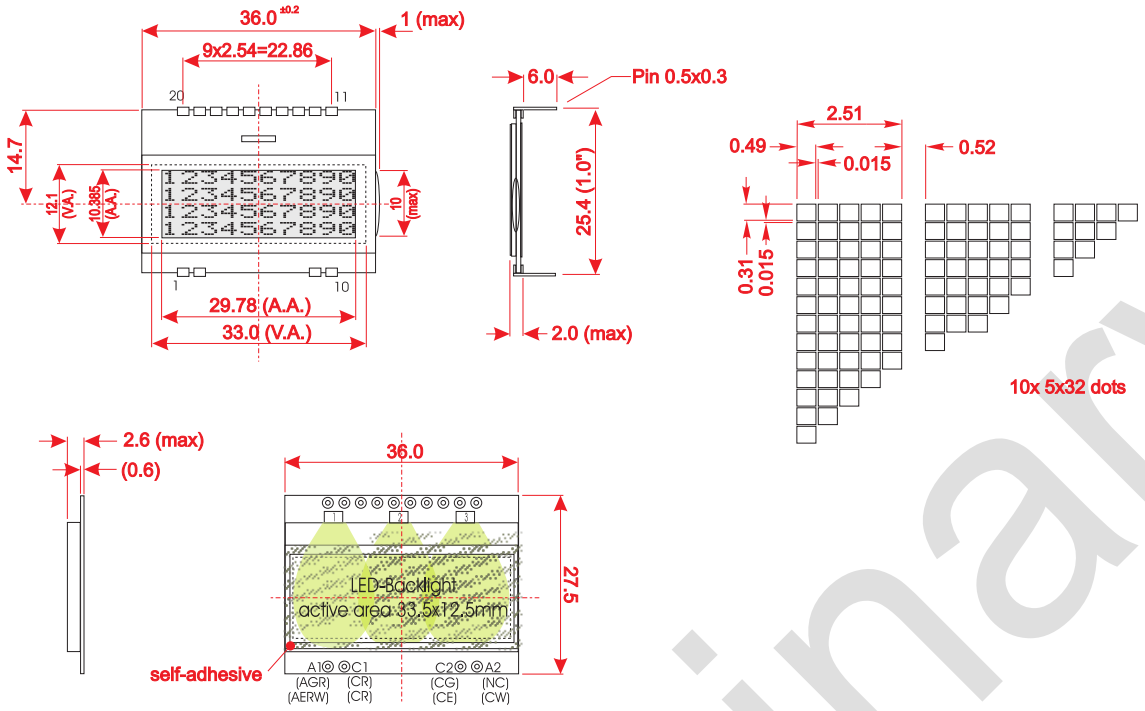

Note:
- LC displays are generally not suitable for wave or reflow soldering. Temperatures above 80°C can lead to permanent damage.
- The surfaces of the displays and backlight are protected from scratching by self-adhesive protective films. Please remove before assembly.

All dimensions in mm

EA LED36x28-A

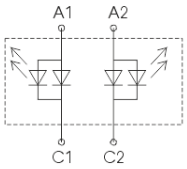

EA LED36x28-GR

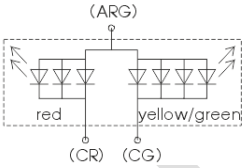

EA LED36x28-ERW

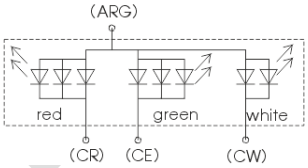

Note: The 4 LED pins A1, C1, A2 and C2 (or AGR, CG, CR) must be soldered from above to ensure a perfect contact. Please use a little tin for this.



PINOUT

Pin	Symbol	Level	Function		Pin	Symbol	Level	Function
1	NC		A1+ / AGR / AERW		20	CS	L	Chip select input
2	NC		C1- / CR / CR		19	RST	L	Reset
3					18	A0	H/L	Data (='H') / Command (='L') selection
4					17	D6/CLK	H/L	Data (Serial: Clock)
5					16	D7/SDA	H/L	Data (Serial: Data)
6					15	C68	H/L	SPI: 9-Bit (='H') / 8-Bit (='L'); I²C: ID1
7					14	VDD	H	Power Supply +2.4...+3.6 V
8					13	GND	L	Power Supply 0 V
9	NC		C2- / CG / CE		12	IIC	H/L	I²C mode select 'L' enable, 'H' disable
10	NC		A2+/ NC / CW		11	V0		Voltage converter output

preliminary